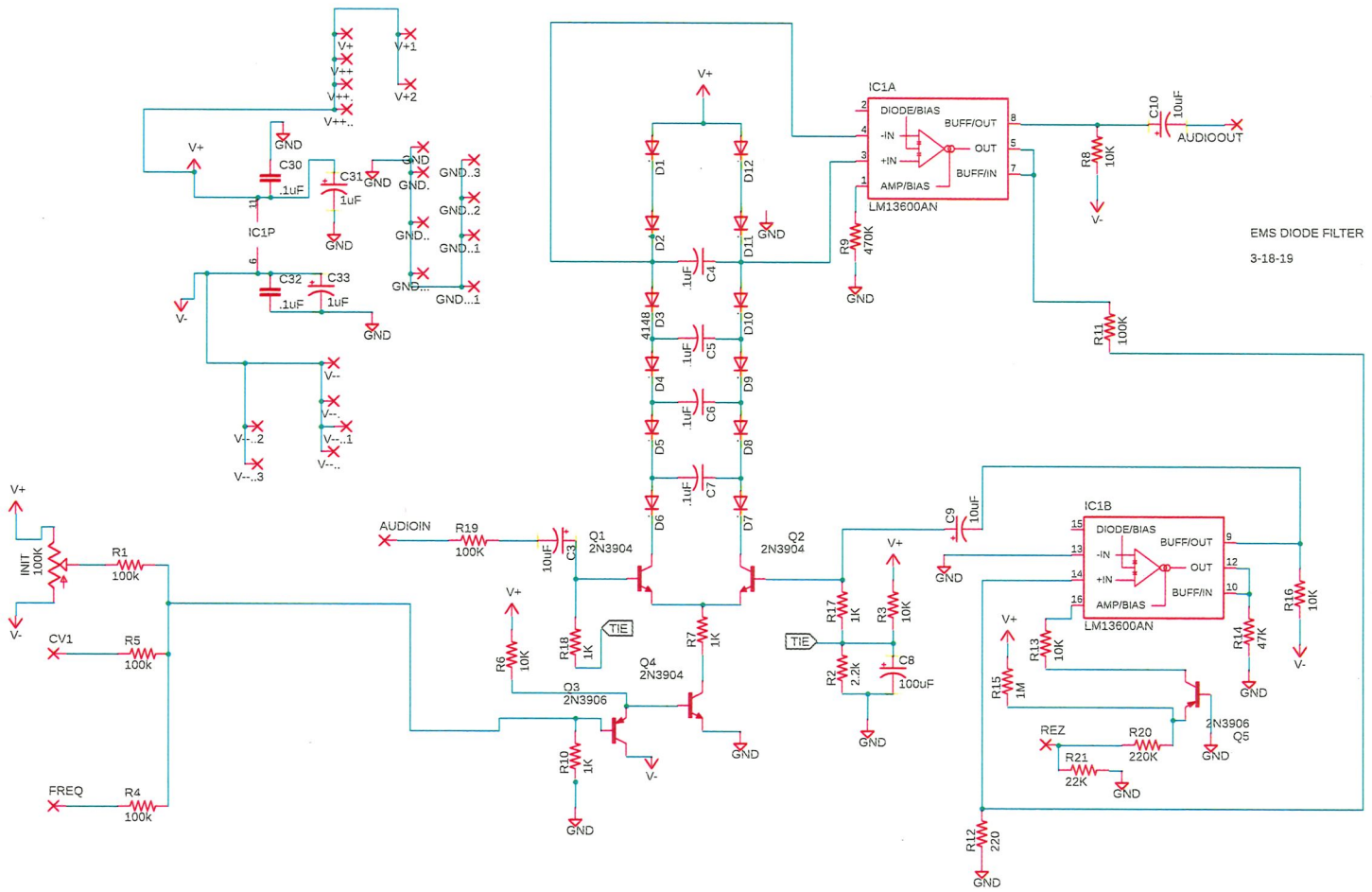
EMS DIODE FILTER
3-18-19
IC1A
LM13600AN
DIODE/BIAS
BUFF/OUT
-IN
+IN
OUT
BUFF/IN
AMP/BIAS
IC1B
LM13600AN
IC1P
AUDIOIN
AUDIOOUT
CV1
FREQ
INIT 100K
REZ
TIE
Q1 2N3904
Q2 2N3904
Q3 2N3906
Q4 2N3904
Q5 2N3906
4148
V+
V-
GND
R1 100k
R4 100k
R5 100k
R6 10K
R7 1K
R8 10K
R9 470K
R10 1K
R11 100K
R12 220
R13 10K
R14 47K
R15 1M
R16 10K
R17 1K
R18 1K
R19 100K
R20 220K
R21 22K
R2 2.2k
R3 10K
C3 10uF
C4 .1uF
C5 .1uF
C6 .1uF
C7 .1uF
C8 100uF
C9 10uF
C10 10uF
C30 .1uF
C31 1uF
C32 .1uF
C33 1uF

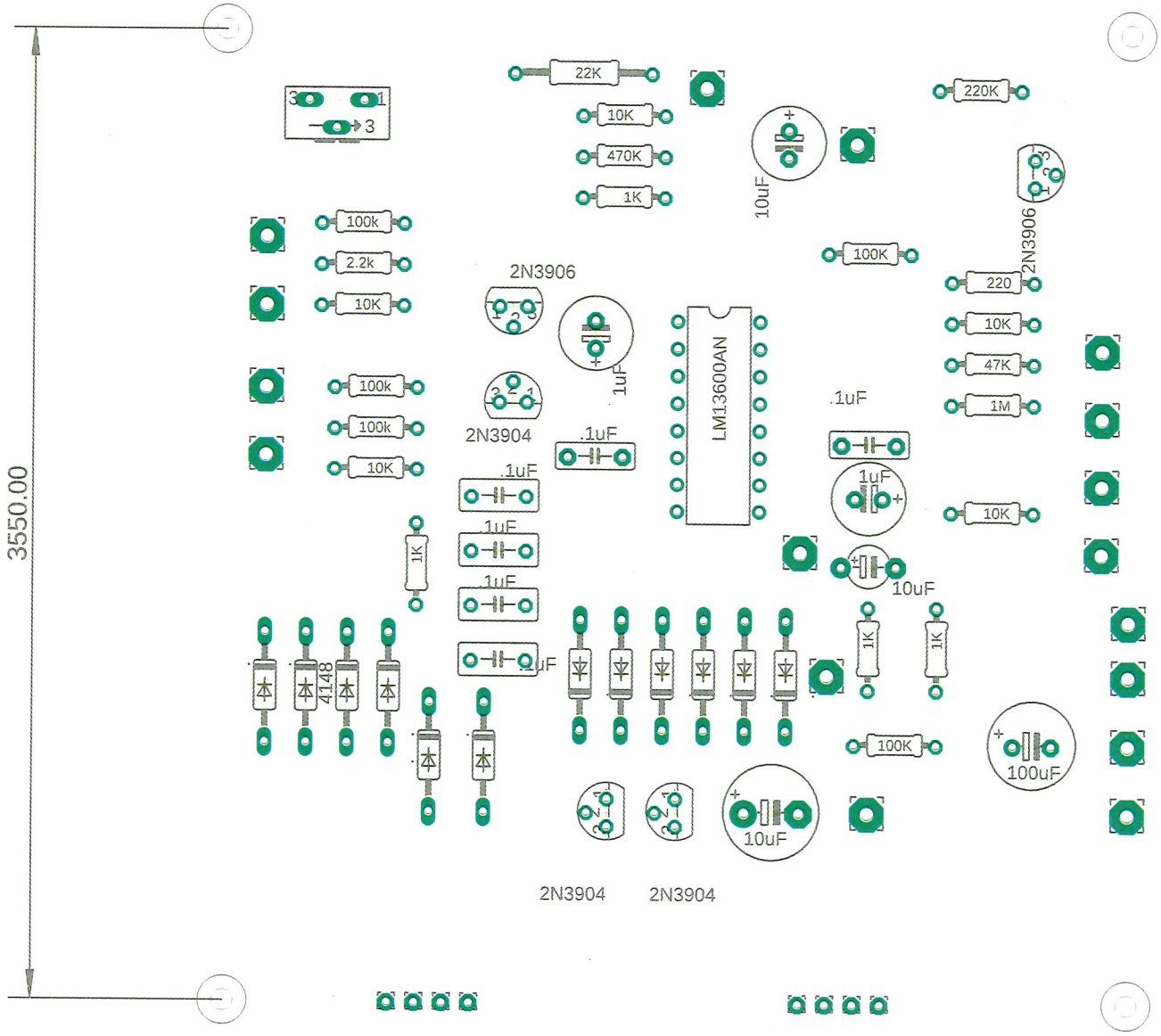
3550.00
22K
10K
470K
1K
10uF
220K
2N3906
100K
220
10K
47K
1M
10K
100k
2.2k
10K
100k
100k
10K
2N3906
2N3904
1uF
LM13600AN
.1uF
.1uF
1uF
10uF
.1uF
.1uF
.1uF
.1uF
1K
4148
1K
1K
100K
100uF
10uF
2N3904
2N3904